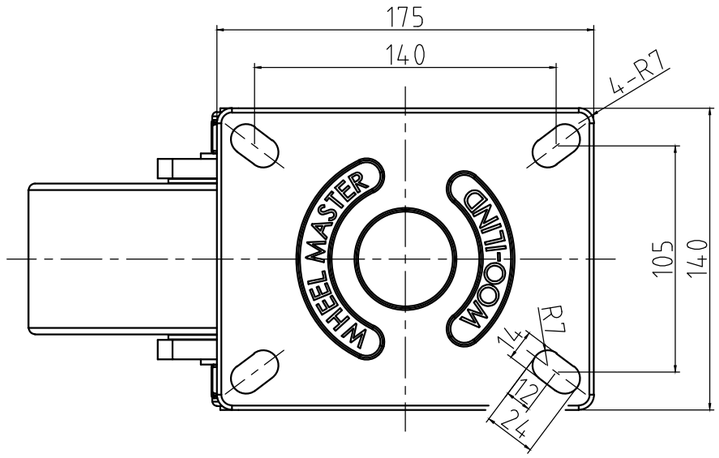

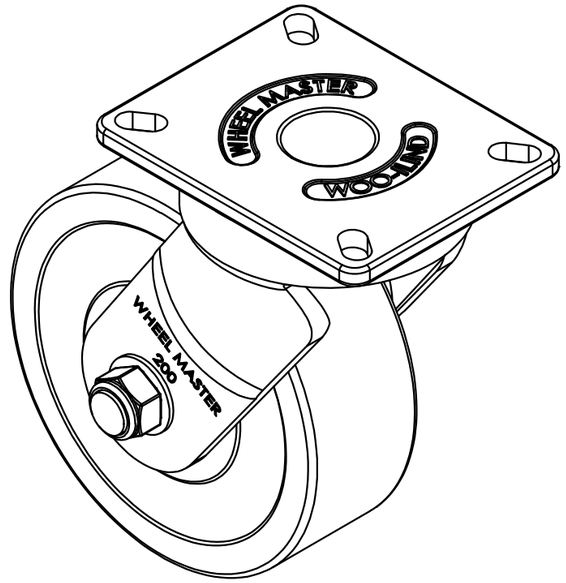

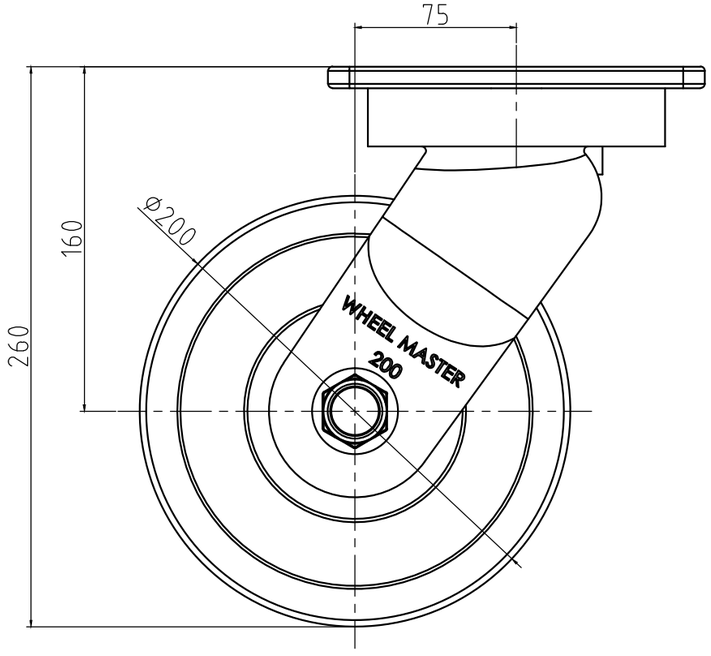

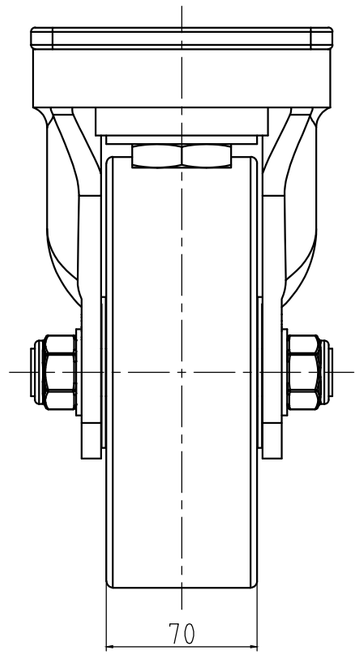

SCALE	1 / 1	WOO - IL INDUSTRY	WXT-200SF-MD
ANGLE			