KJF
TOTAL CLAMPING SYSTEM

AIR TYPE

Model No	Weight	3350g
KJF-AR-72	Holding Capacity	1000Kg
	Air Port	PT 1/8
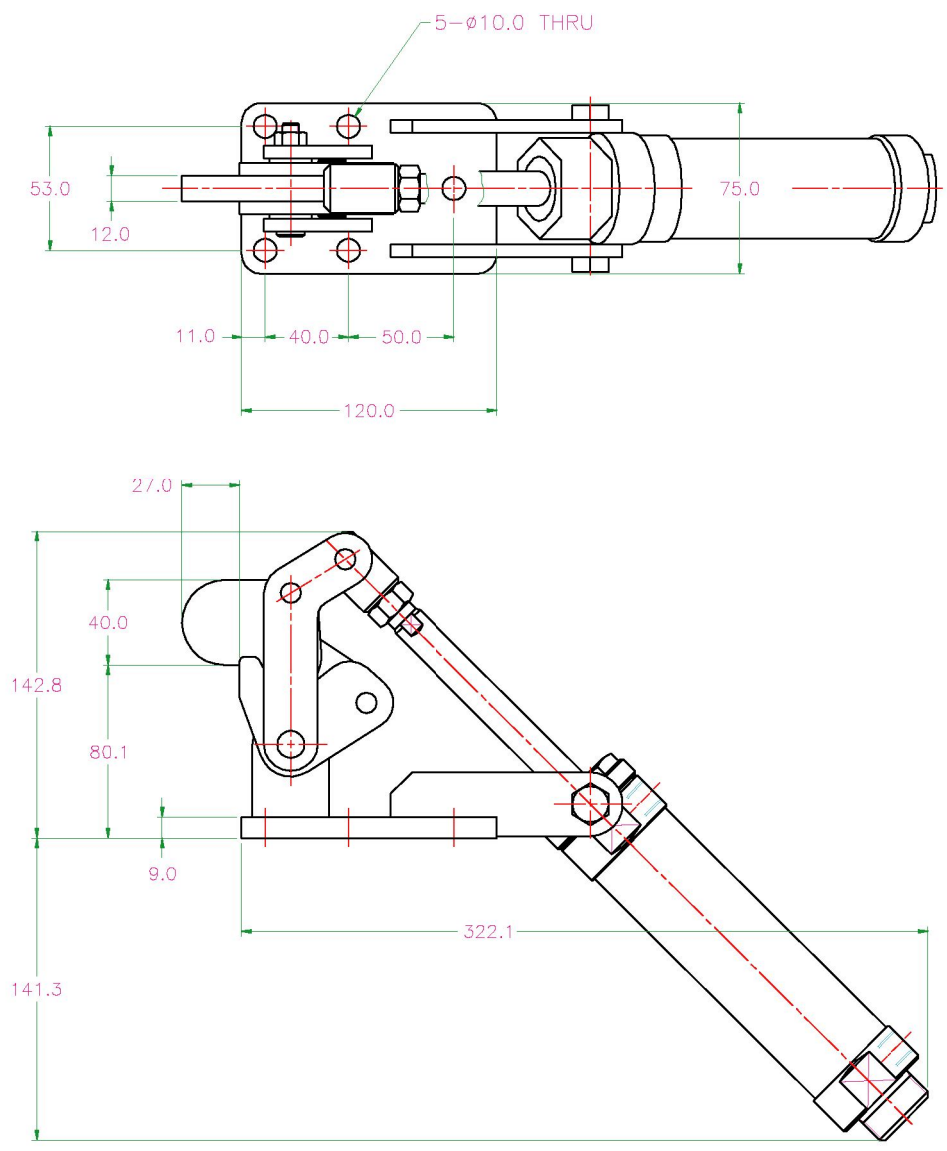
Cylinder Size : ø40.0x100(ST)