KJF
TOTAL CLAMPING SYSTEM

PUSH/PULL TYPE
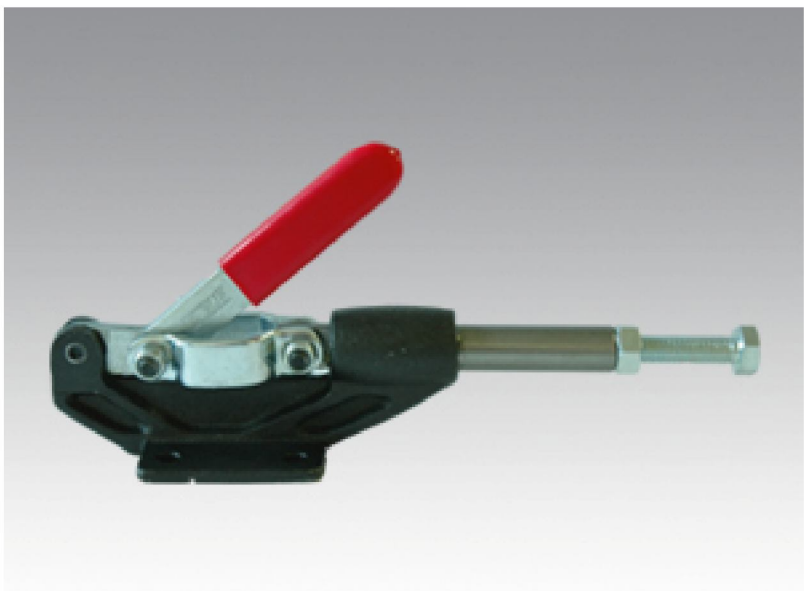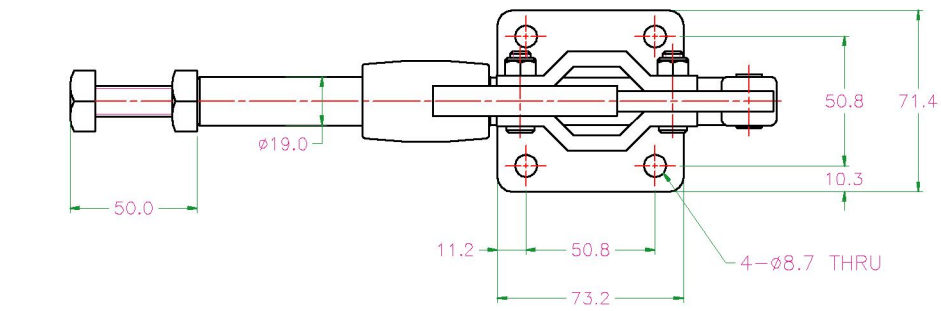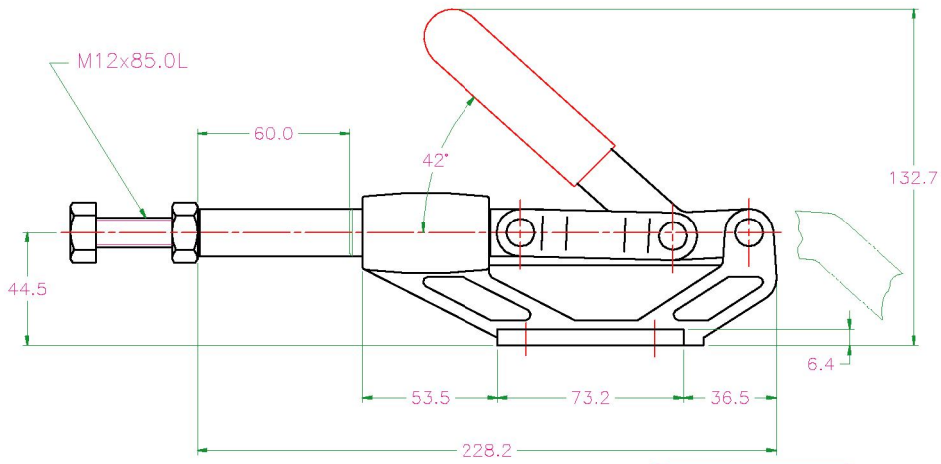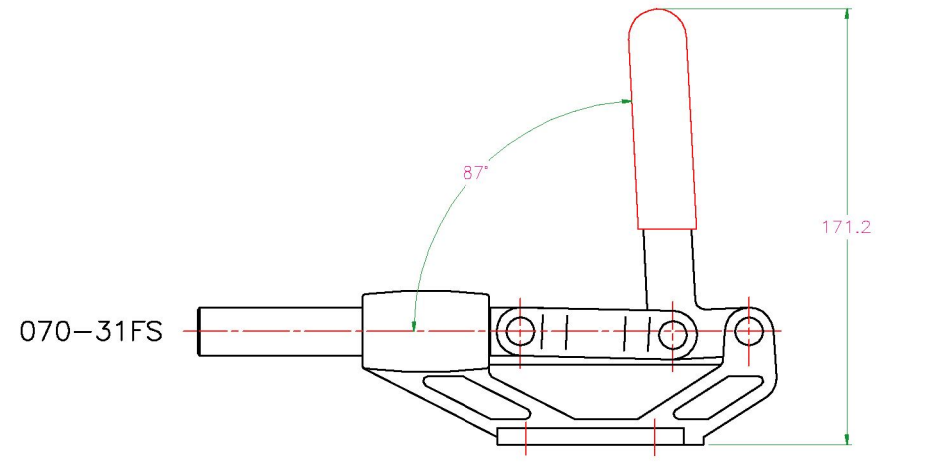
Model No		
KJF-070-31FD,31FS	Weight	1500g
	Holding Capacity	700Kg
	Handle Moves	180°
	Rod Stroke	60.0mm