KJF
TOTAL CLAMPING SYSTEM

PUSH/PULL TYPE

Model No		
KJF-040-31FD,31FS	Weight	700g
	Holding Capacity	400Kg
	Handle Moves	180°
	Rod Stroke	42.0mm

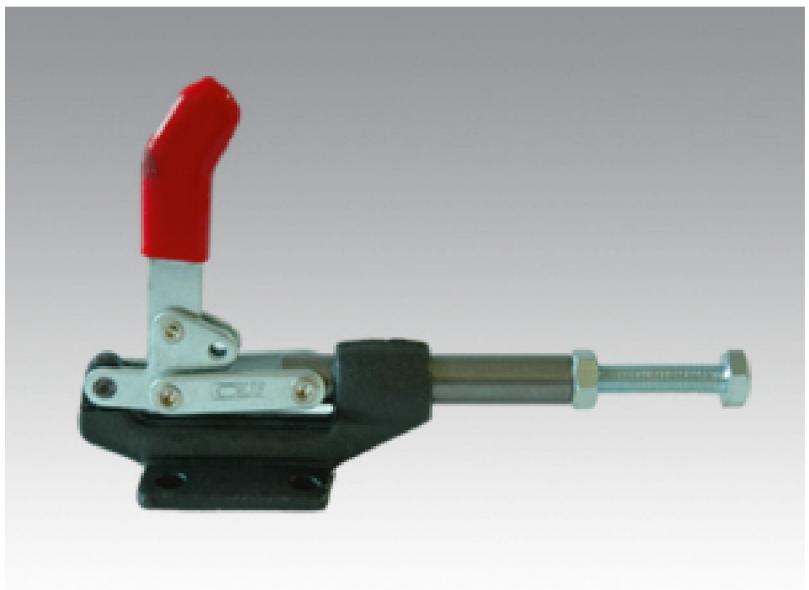

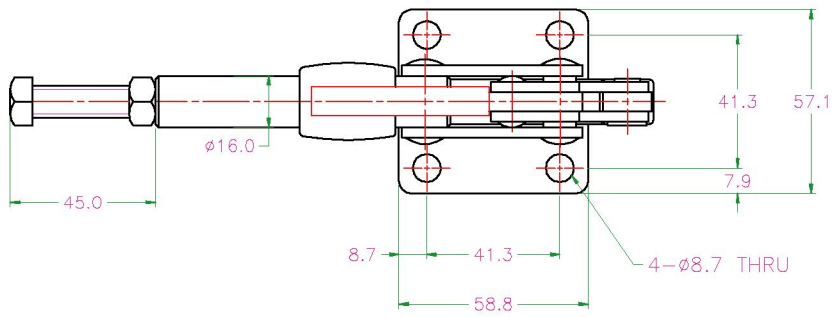

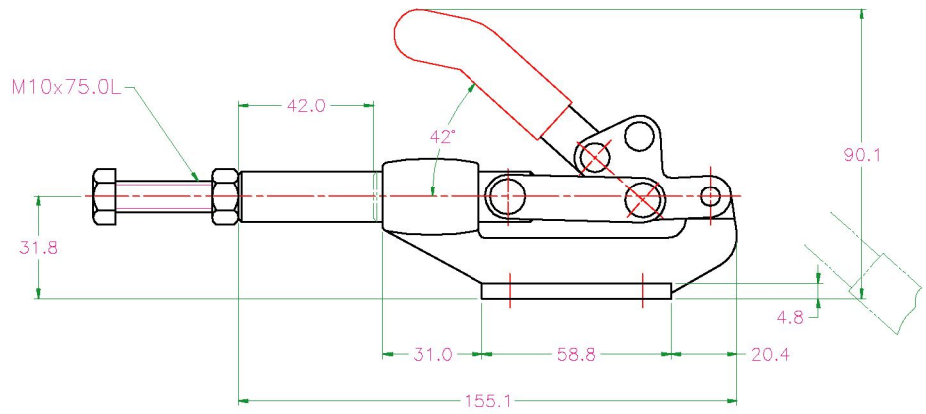
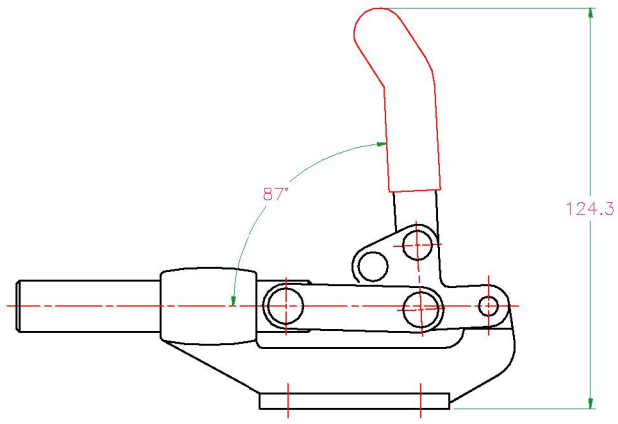
023-31FS